Circuit diagram of ZTEX Power Supply Module 1.2

Contents:

Sheet 1	Voltage regulators
Sheet 2	JTAG and power interface

http://www.ztex.de

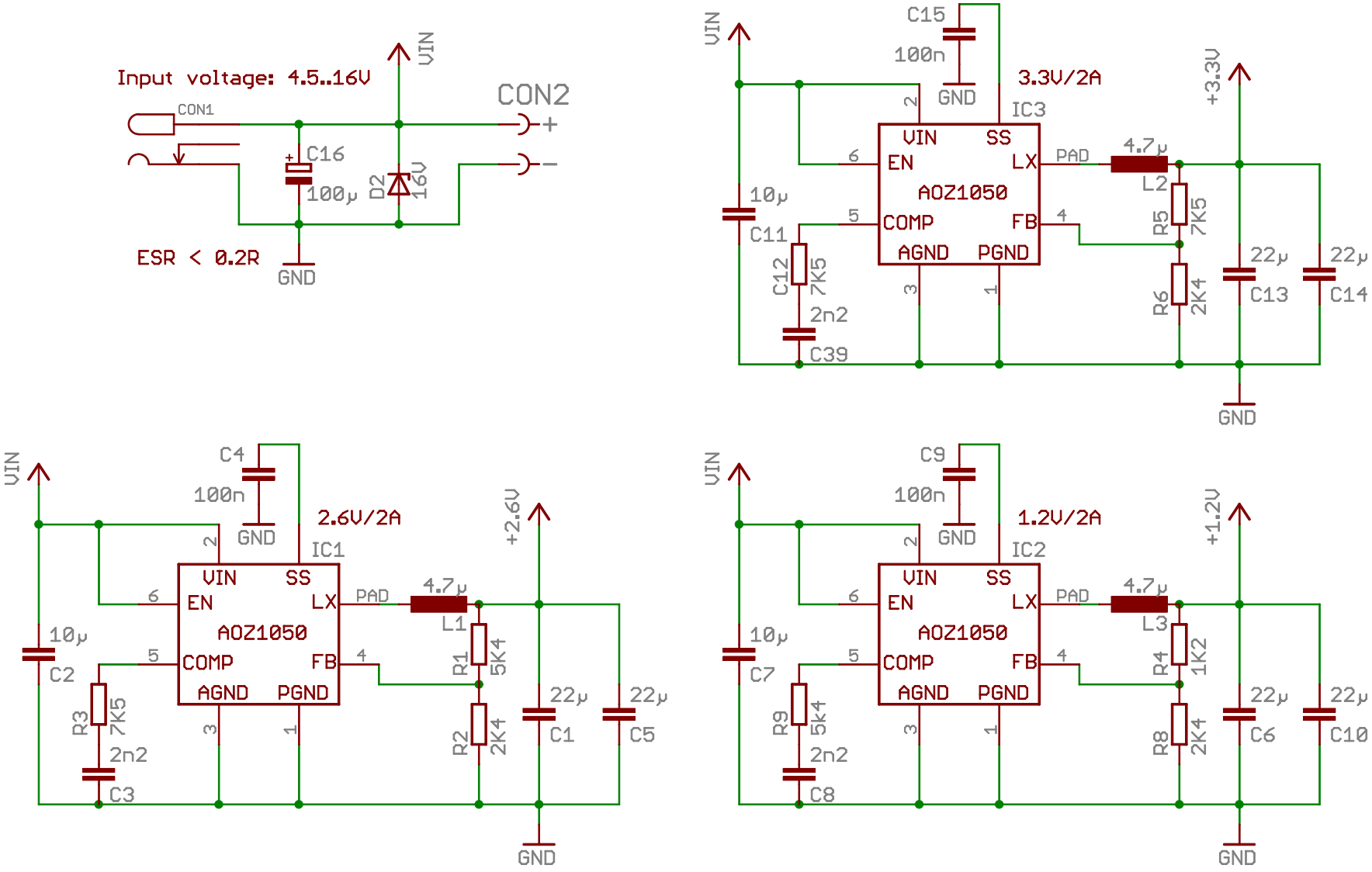
Input voltage: 4.5..16V
VIN
CON1
CON2
C16
100µ
D2
16V
ESR < 0.2R
GND
C15
100n
3.3V/2A
IC3
AOZ1050
VIN
SS
EN
LX
PAD
COMP
FB
AGND
PGND
4.7µ
L2
R5
7K5
R6
2K4
10µ
C11
C12
7K5
2n2
C39
22µ
C13
C14
+3.3V
C4
100n
2.6V/2A
IC1
L1
R1
5K4
R2
2K4
R3
7K5
2n2
C3
C2
C1
C5
+2.6V
C9
100n
1.2V/2A
IC2
L3
R4
1K2
R8
2K4
R9
5k4
2n2
C8
C7
C6
C10
+1.2V

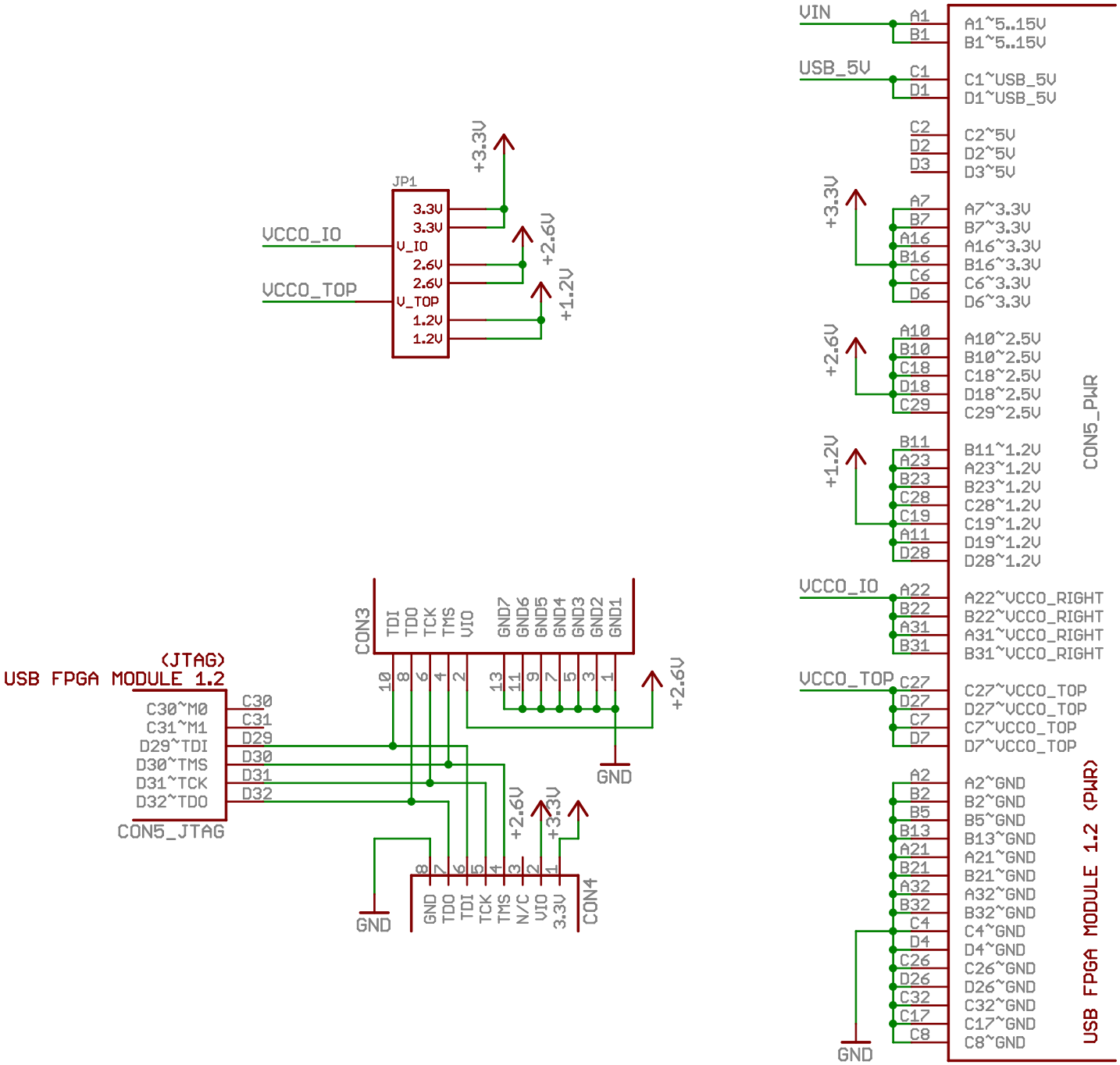
JP1
VCCO_IO
VCCO_TOP
3.3V
3.3V
V_IO
2.6V
2.6V
V_TOP
1.2V
1.2V
+3.3V
+2.6V
+1.2V
CON3
TDI TDO TCK TMS VIO GND7 GND6 GND5 GND4 GND3 GND2 GND1
10 8 6 4 2 13 11 9 7 5 3 1
+2.6V
GND
USB FPGA MODULE 1.2
(JTAG)
C30~M0
C31~M1
D29~TDI
D30~TMS
D31~TCK
D32~TDO
C30 C31 D29 D30 D31 D32
CON5_JTAG
GND
+2.6V
+3.3V
8 7 6 5 4 3 2 1
GND TDO TDI TCK TMS N/C VIO 3.3V
CON4
VIN
A1 B1
A1~5..15V
B1~5..15V
USB_5V
C1 D1
C1~USB_5V
D1~USB_5V
C2 D2 D3
C2~5V
D2~5V
D3~5V
+3.3V
A7 B7 A16 B16 C6 D6
A7~3.3V
B7~3.3V
A16~3.3V
B16~3.3V
C6~3.3V
D6~3.3V
+2.6V
A10 B10 C18 D18 C29
A10~2.5V
B10~2.5V
C18~2.5V
D18~2.5V
C29~2.5V
+1.2V
B11 A23 B23 C28 C19 A11 D28
B11~1.2V
A23~1.2V
B23~1.2V
C28~1.2V
C19~1.2V
D19~1.2V
D28~1.2V
CON5_PWR
VCCO_IO
A22 B22 A31 B31
A22~VCCO_RIGHT
B22~VCCO_RIGHT
A31~VCCO_RIGHT
B31~VCCO_RIGHT
VCCO_TOP
C27 D27 C7 D7
C27~VCCO_TOP
D27~VCCO_TOP
C7~VCCO_TOP
D7~VCCO_TOP
A2 B2 B5 B13 A21 B21 A32 B32 C4 D4 C26 D26 C32 C17 C8
A2~GND
B2~GND
B5~GND
B13~GND
A21~GND
B21~GND
A32~GND
B32~GND
C4~GND
D4~GND
C26~GND
D26~GND
C32~GND
C17~GND
C8~GND
GND
USB FPGA MODULE 1.2 (PWR)